mondoluce

Melbourne
272 Toorak Rd, South Yarra VIC 3141
melbourne@mondoluce.com
03 9826 2232

Sydney
439 Crown St, Surry Hills NSW 2010
sydney@mondoluce.com
02 9690 2667

Teti Ceiling / Wall Lamp - Matte Edition

by Vico Magistretti

Part of a special collaboration between Artemide and Danese Milano, the Teti Matte Edition ceiling wall lamp presents a timeless Artemide design through a fresh chromatic lens. The Matte Edition brings together finishes from two limited edition collections, offering the Teti's iconic conical silhouette in six exclusive colours: Yellow, Blue, Blue Klein, Green, and Lavender from the Colour Matte Collection, alongside the deep, glossy Ruby Red. A fixture in the Artemide catalogue since 1967, Teti's form, reminiscent of a chess piece, features a thermoplastic body that emits soft, diffused light from either ceiling or wall. Across these finishes, the Teti's essential simplicity takes on a new visual strength; its clean lines and balanced glow, normally designed to recede, instead become a focal point within the space. The Teti Matte Edition ceiling wall lamp is made in Italy by Artemide.

Designer	Vico Magistretti
Supplier	Artemide
Country	Italy
SKU	ART PL/TETI/MATTE
Warranty	12 months
Finish Options	Blue Klein, Green, Light Blue, Lilac, Ruby Red, Yellow
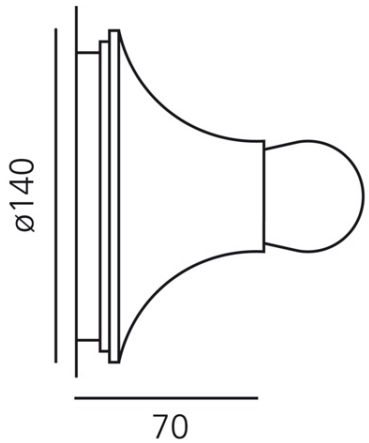
Product Dimensions