mondoluce

Melbourne
272 Toorak Rd, South Yarra VIC 3141
melbourne@mondoluce.com
03 9862 2232

Sydney
439 Crown St, Surry Hills NSW 2010
sydney@mondoluce.com
02 9690 2667

Lua Wall Light

by Marco Pagnoncelli

The Lua Wall Light features an adjustable light source that is only 6mm thick. An aluminium disc with a smooth profile produces indirect lighting which enhances the Lua's deisgn. Equipped with a high efficiency LED with no driver required. Lua is available in two sizes in a variety of finish options. Made in Italy.

Designer	Marco Pagnoncelli
Supplier	Icone
Country	Italy
SKU	IC A/LUA
Warranty	2yr commercial / 3yr residential
Finish Options	Dark Brown + Copper Silver, Rust + Gold Silver, White + Gold Silver
Size Options	20cm, 30cm
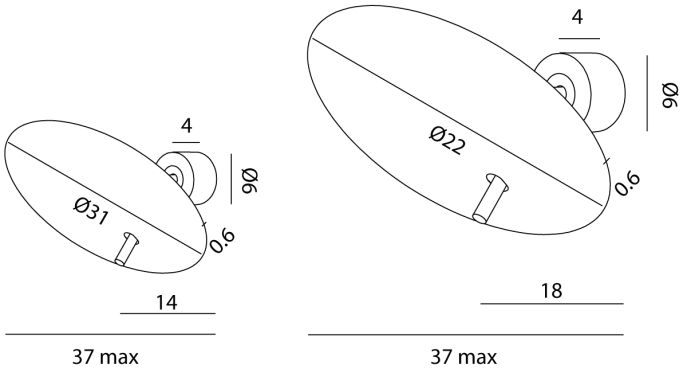
Product Dimensions