mondoluce

Melbourne
272 Toorak Rd, South Yarra VIC 3141
melbourne@mondoluce.com
03 9826 2232

Sydney
439 Crown St, Surry Hills NSW 2010
sydney@mondoluce.com
02 9690 2667

ARCO REACH/100/36D/3K/WHITE/BLACK

Reach 100 Adjustable Barrel Spot

by

The Arcolight Reach 100 Adjustable Barrel Spot is a recessed LED spotlight with a barrel that extends below the ceiling, giving directional accent and display lighting. It runs a 12W LED at 3000K and delivers 1051 lumens with a CRI above 90. You can choose a 36 or 60 degree beam. The Reach 100 is rated IP20 and IC-4, so it can be installed in contact with ceiling insulation. It comes with a phase cut dimmable, flicker free driver. The white body is offered with a black or white trim. It suits retail, hospitality, gallery and residential interiors that need adjustable accent lighting. The family also includes the smaller Reach 75 and the twin-head Reach Duo. The Reach 100 Adjustable Barrel Spot is part of the Arcolight collection, showcasing premium architectural lighting curated by Studio Italia.



Supplier	Arcolight
Country	China
SKU	ARCO REACH/100/36D/3K/WHITE/BLACK
Finish	White (Black trim)
Version	36 degree

Product Dimensions

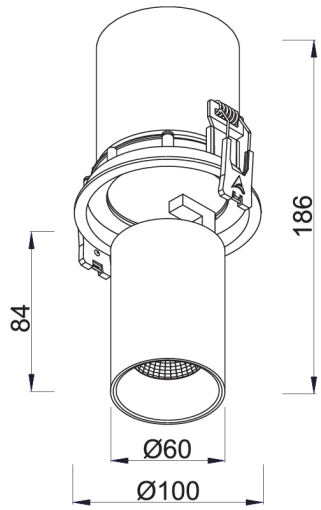

Cut Out: 92mm

Materials	Aluminium	**Source**	12W LED	**Colour Temp**	3000K
Output	1051lm	**CRI**	90+	**Emission**	36 degree beam
IP Rating	IP20	**Dimming**	PHASE	**Notes**	350 degree rotation with 90 degree adjustable angle, extendable, 92mm cutout