mondoluce

Melbourne
272 Toorak Rd, South Yarra VIC 3141
melbourne@mondoluce.com
03 9826 2232

Sydney
439 Crown St, Surry Hills NSW 2010
sydney@mondoluce.com
02 9690 2667

ARCO REACH/DUO/100/60D/3K/WHITE/BLACK

Reach Duo Adjustable Barrel Spot

by

The Arcolight Reach Duo Adjustable Barrel Spot puts two Reach 100 spotlights in a single recessed twin housing, giving directional accent lighting from one ceiling cutout. Each head runs a 12W LED at 3000K and delivers 1051 lumens with a CRI above 90. You can choose a 36 or 60 degree beam. The Reach Duo is rated IP20 and IC-4, so it can be installed in contact with ceiling insulation. It comes with two phase cut dimmable, flicker free drivers, one for each head. The white body is offered with a black or white trim. It suits retail displays, hospitality, galleries and residential interiors where several features need lighting from one position. The Reach Duo Adjustable Barrel Spot is part of the Arcolight collection, showcasing premium architectural lighting curated by Studio Italia.



Supplier	Arcolight
Country	China
SKU	ARCO REACH/DUO/100/60D/3K/WHITE/BLACK
Finish	White (Black trim)
Version	60 degree

Product Dimensions

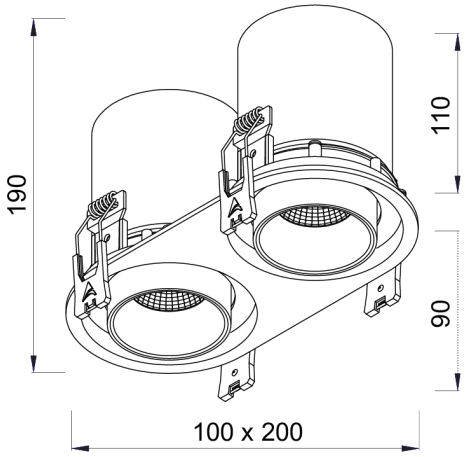

Cut Out: 92 x 192mm

Materials	Aluminium	**Source**	2 x 12W LED	**Colour Temp**	3000K
Output	2 x 1051lm	**CRI**	90+	**Emission**	60 degree beam
IP Rating	IP20	**Dimming**	PHASE	**Notes**	350 degree rotation with 90 degree adjustable angle, extendable, 92 x 192mm cutout