mondoluce

Melbourne
272 Toorak Rd, South Yarra VIC 3141
melbourne@mondoluce.com
03 9826 2232

Sydney
439 Crown St, Surry Hills NSW 2010
sydney@mondoluce.com
02 9690 2667

ARCO A/LOOP/FUSION/AMBER/WHITE

Loop Ceiling Wall Light

by Arcolight



The Arcolight Loop is a compact 5W wall or ceiling light suited to a wide range of residential and commercial applications. Three switch-controlled CCT modes - 2700K (250lm), 3000K (270lm), and 4000K (280lm) - provide flexibility across different settings. Supplied with a 500mA low flicker trailing edge dimmable driver and a CRI of >90. The toughened glass diffuser is rated IP65 and carries an IK05 impact rating, making Loop well suited to bathrooms, ensuites, and exterior areas. Three glass diffuser styles are available - Ebb, Fusion, and Fusion Amber - each offering a distinct visual character while maintaining the same robust performance. Standard in white finish, with an optional decorative ring accessory (sold separately) in black, white, brushed brass, chrome, dark bronze, or matt nickel. The Arcolight Loop is part of the Arcolight collection, curated by Studio Italia.

Designer	Arcolight
Supplier	Arcolight
Country	China
SKU	ARCO A/LOOP/FUSION/AMBER/WHITE
Version	Fusion Amber

Product Dimensions

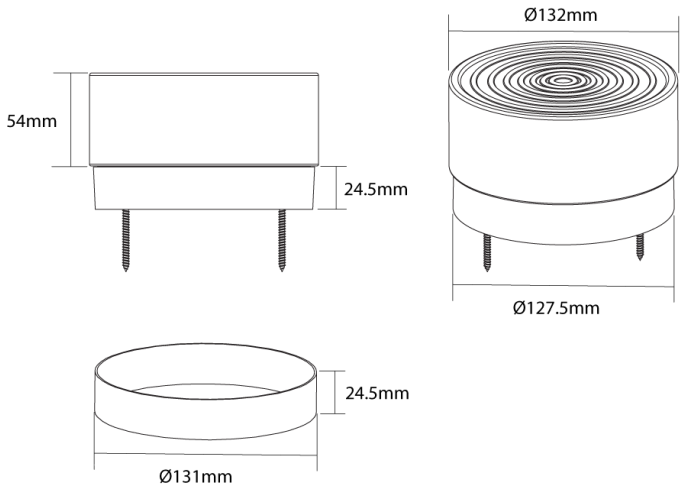

Materials	Silicon diffuser, glass shade	**Source**	5W LED	**Colour Temp**	2700K/3000K/4000K
Output	350lm/370lm/380lm	**CRI**	CRI>90	**IP Rating**	IP65 / IK05
Dimming	Phase Dimmable	**Notes**	Triple CCT switch		