mondoluce

Melbourne
272 Toorak Rd, South Yarra VIC 3141
melbourne@mondoluce.com
03 9826 2232

Sydney
439 Crown St, Surry Hills NSW 2010
sydney@mondoluce.com
02 9690 2667

ARCO RATIO/80/36D/3K/WHITE

Ratio 80 Downlight

by Arcolight

The Arcolight Ratio 80 is a high-performing and cost-effective LED downlight. Offering CRI 90+, SDCM<2, and available in 2700K or 3000K colour temperatures. Rated IC-4 and IP44, the Ratio is suited to a broad range of commercial and residential applications including wet areas. Each variant is supplied with 250mA phase cut flicker free dimmable drivers, with optional Dali drivers available - finished in textured black or white. The Arcolight Ratio Downlight is part of the Arcolight collection, showcasing premium architectural lighting curated by Studio Italia.



Designer	Arcolight
Supplier	Arcolight
Country	China
SKU	ARCO RATIO/80/36D/3K/WHITE
Finish	Textured White
Version	3000K - 36d - Phase Cut dimming

Product Dimensions

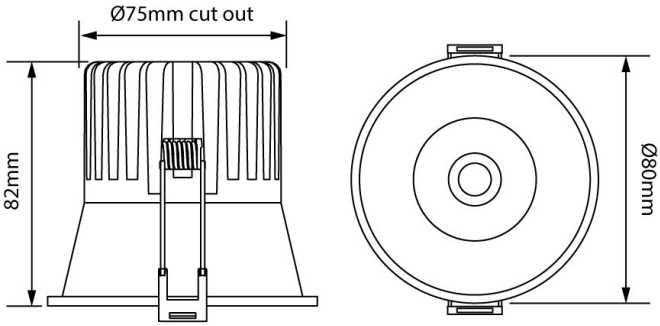

Weight	0.2kg	**Materials**	Aluminium	**Source**	10W LED
Colour Temp	3000K	**Output**	1043lm	**CRI**	90+
Emission	36d beam	**IP Rating**	IP44	**Dimming**	Phase Cut
Notes	Cut-Out: 75mm, Driver: 250mA Flicker Free, IC Rating: IC-4				