mondoluce

Melbourne
272 Toorak Rd, South Yarra VIC 3141
melbourne@mondoluce.com
03 9826 2232

Sydney
439 Crown St, Surry Hills NSW 2010
sydney@mondoluce.com
02 9690 2667

ART 0452010A

Logico Ceiling Light

by Michele De Lucchi, Gerhard Reichert

The Artemide Logico Single Ceiling Light exemplifies minimalist Italian design with its handblown glass diffuser that appears to float beneath your ceiling. Designed by Michele De Lucchi and Gerhard Reichert this ceiling-mounted fixture delivers soft diffused illumination through its organically shaped satin glass shade. The die-cast aluminium supporting frame in matte grey finish complements any contemporary interior. Ideal for residential and commercial applications where understated elegance meets functional lighting. Available in multiple sizes and finishes to suit various spatial requirements.



Designer	Michele De Lucchi, Gerhard Reichert
Supplier	Artemide
Country	Italy
SKU	ART 0452010A
Finish	Fume
Size	Standard

Product Dimensions

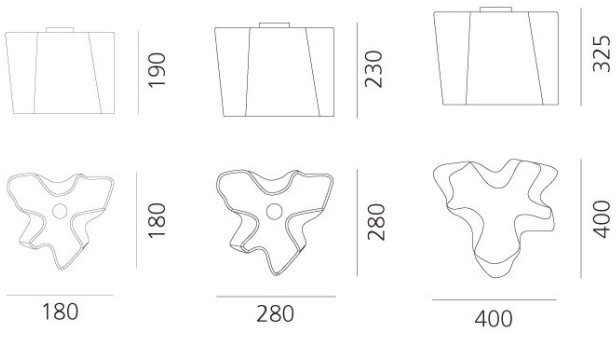

Weight	8.2kg	**Materials**	Blown glass, aluminium	**Source**	1 x E27 12W (Max)
Emission	Diffused and direct	**IP Rating**	IP20	**Dimming**	Dependant on globe