mondoluce

Melbourne
272 Toorak Rd, South Yarra VIC 3141
melbourne@mondoluce.com
03 9826 2232

Sydney
439 Crown St, Surry Hills NSW 2010
sydney@mondoluce.com
02 9690 2667

ARCO VEER 9W 3000K - 258

Veer Adjustable Ceiling Spot

by Arcolight

The Arcolight Veer Adjustable Ceiling Spot is a compact directional spotlight with ceiling mount and adjustable head for targeted illumination. Equipped with a 9W LED delivering 850 lumens with 90 colour rendering index and SDCM less than 2 for consistent colour accuracy. Available in 15-degree 24-degree 36-degree and 50-degree beam angles. TRIAC dimmable. Available in various finishes with black, white or gold trim options. The Veer Adjustable Ceiling Spot is part of the Arcolight collection showcasing premium architectural lighting curated by Studio Italia.



Designer	Arcolight
Supplier	Arcolight
Country	China
SKU	ARCO VEER 9W 3000K - 258
Body Finish	Black
Trim Finish	Black
Version	36D Lens

Product Dimensions

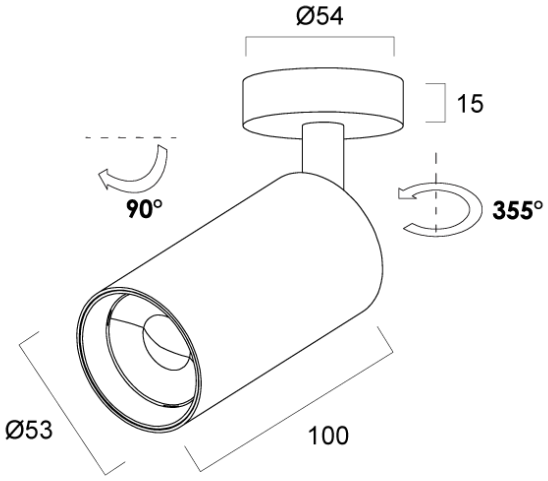

Materials	Aluminium	**Source**	9W LED	**Colour Temp**	3000K
Output	850lm	**CRI**	90	**Emission**	36-degree beam
IP Rating	IP20	**Dimming**	TRIAC	**Notes**	SDCM<2 / Canopy 54mm x 15mm / 355d rotation with 90d adjustability