Studio Italia

Trade Warehouse
12 Thomas St, Yarraville VIC 3013
info@studioitalia.com.au
03 9690 4155

AX S/LIAISON/M/1/BLACK/GOLD

Liaison Pendant Light System

by Sara Moroni

Liaison is a lighting system based upon a single articulated shape. The first collaboration between Italian designer Sara Moroni and Axolight. The concept behind the Liaison was to design a pendant luminaire with the possibility to customize shape, colour and dimensions, creating functional solutions for varying interior concepts. Liaison can be installed individually as single pendants, or in compositions of 2, 4, and 8 in one or two tiers with elements joined by a central sphere. Finish options include black Frame with gold end caps, gold Frame with black end caps, or black frame and end caps.



Designer	Sara Moroni
Supplier	Axo Light
Country	Italy
SKU	AX S/LIAISON/M/1/BLACK/GOLD
Finish	Black / Matt Gold
Size	M1

Product Dimensions

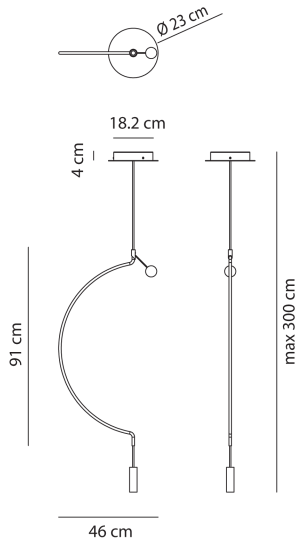

Weight	4kg	**Materials**	Aluminium	**Source**	1 x 9W LED
Colour Temp	3000K	**Output**	1 x 670lm	**CRI**	90
Emission	40 degree beam	**IP Rating**	IP20	**Dimming**	1-10v