Studio Italia

Trade Warehouse
12 Thomas St, Yarraville VIC 3013
info@studioitalia.com.au
03 9690 4155

WEB KAPE-CURVE-BKGR

Kape Curve Adjustable Exterior Wall Light

by Arcolight

The Arcolight Kape Curve Adjustable is an up/down exterior wall light with a gently curved aluminium body. Each light direction features two independently adjustable louvres that move continuously from 0 to 90 degrees, with engraved angle markings for precise beam control. This allows specifiers to fine-tune the up and down light distribution separately, creating a wide range of illumination effects from a single fitting. Equipped with 2x LED delivering 750 lumens total at 3000K with a colour rendering index of 90. Phase cut dimmable and rated IP65 for exterior use. Suited to facades, entrance areas, corridors, and feature walls across commercial and residential projects. The Kape Curve Adjustable is available in black grey, gold, and white finishes. Part of the Arcolight collection, curated by Studio Italia.



Designer	Arcolight
Supplier	Arcolight
Country	China
SKU	WEB KAPE-CURVE-BKGR
Finish	Black Grey

Product Dimensions

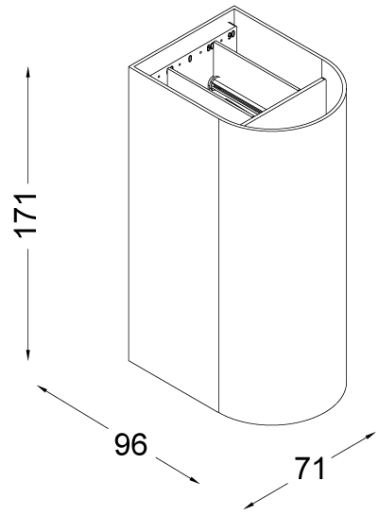

Materials	Aluminium
Output	750lm (total)
IP Rating	IP65

Source	2 x 6W LED
CRI	90
Dimming	PHASE CUT

Colour Temp	3000K
Emission	Adjustable 0-90 degree beam up and down