mondoluce

Melbourne
272 Toorak Rd, South Yarra VIC 3141
melbourne@mondoluce.com
03 9826 2232

Sydney
439 Crown St, Surry Hills NSW 2010
sydney@mondoluce.com
02 9690 2667

MAS A/LUPPITER/A1/BLACK/BRUSHED GOLD

Luppiter Wall Light

by Marco Zito

Designed by Marco Zito, Luppiter is a modular synthesis of geometric elements, materials and finishes. Wall lamp composed of a metal frame with sphere in metal or alabaster. Elements finished in painted matt black and brushed gold. LED source.



Designer	Marco Zito
Supplier	Masiero
Country	Italy
SKU	MAS A/LUPPITER/A1/BLACK/BRUSHED GOLD
Version	Brushed Gold Sphere

Product Dimensions

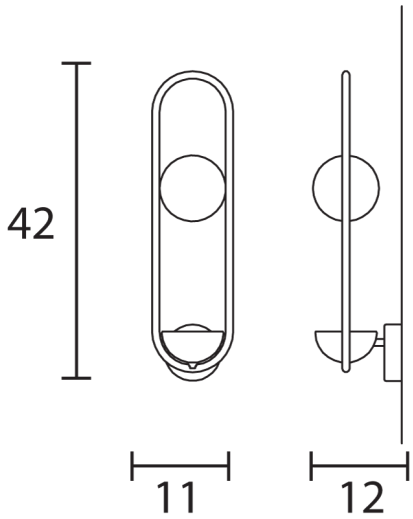

Materials	Metal	**Source**	8W LED	**Colour Temp**	3000K
Output	690lm	**CRI**	>90	**IP Rating**	IP20
Dimming	TRIAC				