Studio Italia

Trade Warehouse
12 Thomas St, Yarraville VIC 3013
info@studioitalia.com.au
03 9690 4155

ARCO A/LOOP/RING/INT/MATT NICKEL

Loop Decorative Ring Accessory

by Arcolight

The Arcolight Loop Decorative Ring is an optional accessory designed to personalise the finish of the Loop wall and ceiling light. Fitted to the base of the Loop during installation, the ring is available in black, white, brushed brass, chrome, dark bronze, and matt nickel, allowing the fitting to complement a range of interior schemes. Note that the black and white rings are rated IP65, making them suitable for bathroom and exterior installations alongside Loop; all other finishes are rated IP20 and are intended for dry interior use only.



Designer	Arcolight
Supplier	Arcolight
Country	China
SKU	ARCO A/LOOP/RING/INT/MATT NICKEL
Finish	Matt Nickel

Product Dimensions

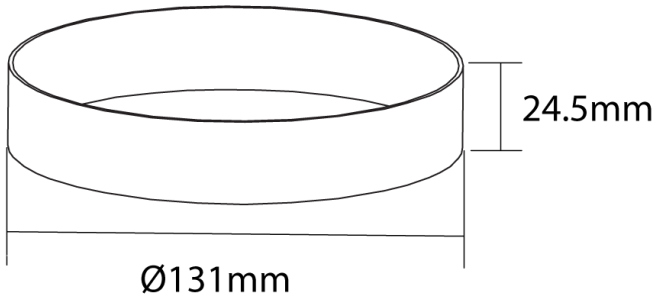

Materials	Metal	**IP Rating**	IP20	**Notes**	Decorative ring for Loop Ceiling Wall Light (sold seperately)