Studio Italia

Trade Warehouse
12 Thomas St, Yarraville VIC 3013
info@studioitalia.com.au
03 9690 4155

ARCO DARC 80 11W 3000K - 496

Darc 80 Deep Downlight

by Arcolight

The Arcolight Darc 80 Deep is a compact recessed downlight with a deep fascia profile. Equipped with an 11W LED delivering up to 854 lumens with exceptional 97 colour rendering index and SDCM less than 2 for outstanding colour consistency. Available in 15-degree 24-degree 36-degree and 50-degree beam angles to suit a range of applications. Rated IP54 and IC-4 with UGR less than 16 for superior glare control. DALI or phase cut flicker free dimming options available. Offered with black or white spring trim and black or white deep fascia combinations. The Darc 80 Deep Downlight is part of the Arcolight collection showcasing premium architectural lighting curated by Studio Italia.

Designer	Arcolight
Supplier	Arcolight
Country	China
SKU	ARCO DARC 80 11W 3000K - 496
Trim	Black Spring Trim
Fascia Finish	Black
Version	50D Lens / DALI

Product Dimensions

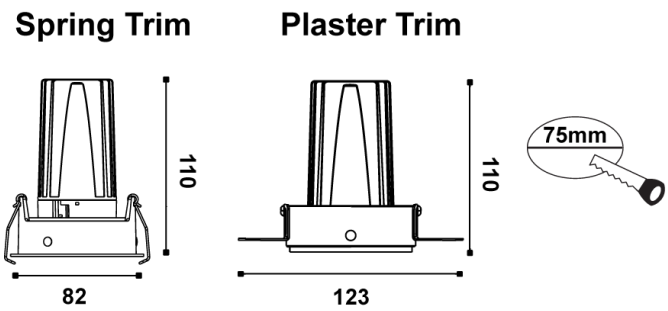

Materials	Aluminium	**Source**	11W LED	**Colour Temp**	3000K
Output	854lm	**CRI**	97	**Emission**	50-degree beam
IP Rating	IP54	**Dimming**	DALI	**Notes**	Cutout 75mm