Studio Italia

Trade Warehouse
12 Thomas St, Yarraville VIC 3013
info@studioitalia.com.au
03 9690 4155

ARCO DARC 80 11W 3000K - 362

Darc 80 Gimble Downlight

by Arcolight

The Arcolight Darc 80 Gimble is a compact adjustable recessed downlight with a gimble fascia allowing 25-degree tilt and 355-degree rotation for precise light aiming. Equipped with an 11W LED delivering up to 814 lumens with exceptional 97 colour rendering index and SDCM less than 2 for outstanding colour consistency. Available in 15-degree 24-degree 36-degree and 50-degree beam angles. Rated IP54 and IC-4 with UGR less than 14 for superior glare control. DALI or phase cut flicker free dimming options available. Offered with black or white spring trim and black or white gimble fascia combinations. The Darc 80 Gimble Downlight is part of the Arcolight collection showcasing premium architectural lighting curated by Studio Italia.

Designer	Arcolight
Supplier	Arcolight
Country	China
SKU	ARCO DARC 80 11W 3000K - 362
Trim	White Spring Trim
Fascia Finish	Black
Version	24D Lens / PHASE

Product Dimensions

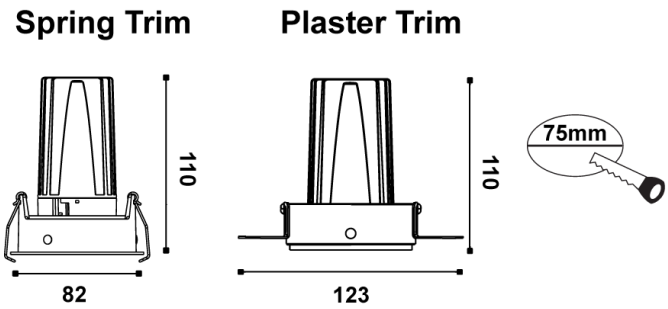

Materials	Aluminium	**Source**	11W LED	**Colour Temp**	3000K
Output	814lm	**CRI**	97	**Emission**	24-degree beam / 25-degree tilt / 355-degree rotation
IP Rating	IP54	**Dimming**	Phase cut flicker free	**Notes**	Cutout 75mm