Studio Italia

Trade Warehouse
12 Thomas St, Yarraville VIC 3013
info@studioitalia.com.au
03 9690 4155

ARCO RAI/40/TILT/BLACK

Rai 40 Downlight

by Arcolight

The Arcolight Rai 40 Tilt is an efficient compact downlight. Equipped with a 4W LED with 90+ colour rendering. Standard with 36-degree lens with interchangable 24-degree and 15-degree lenses supplied. Rated IP44 and IC-4. Available in textured black or white finish. Phase cut flicker free dimming. The Rai 40 Tilt Downlight is part of the Arcolight collection, showcasing premium architectural lighting curated by Studio Italia.



Designer	Arcolight
Supplier	Arcolight
Country	China
SKU	ARCO RAI/40/TILT/BLACK
Finish	Black

Product Dimensions

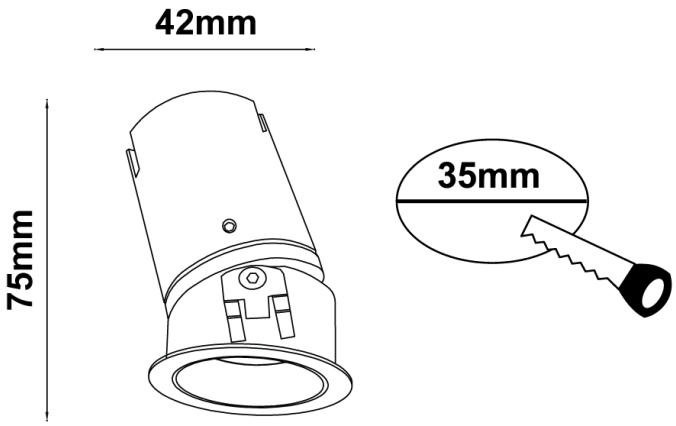

Materials	Aluminium	**Source**	4W LED	**Colour Temp**	3000K
Output	280lm	**CRI**	90+	**Emission**	36d beam (15d and 24d lens also supplied)
IP Rating	IP44	**Dimming**	Phase Cut Flicker Free	**Notes**	20d tilt, 35mm cut-out