Studio Italia

Trade Warehouse
12 Thomas St, Yarraville VIC 3013
info@studioitalia.com.au
03 9690 4155

ART 0615030A

Talo Wall Light

by Neil Poulton

Essential and functional, its geometric shape is designed to accommodate various light sources and LED circuits of various power ratings, extending to distribute diverse sources and the light emission and support various lighting requirements.



Designer	Neil Poulton
Supplier	Artemide
Country	Italy
SKU	ART 0615030A
Finish	Polished chrome
Version	3000K

Product Dimensions

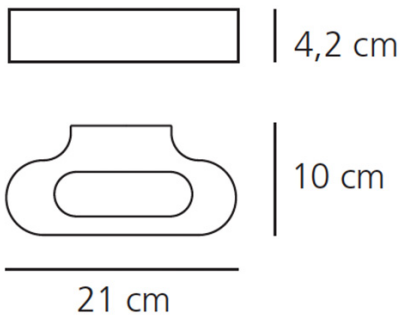

Weight	1.007kg	**Materials**	Aluminium, methacrylate, polycarbonate	**Source**	20W
Colour Temp	3000K	**Output**	1991lm	**CRI**	90
IP Rating	IP20	**Dimming**	Push		