mondoluce

Melbourne
272 Toorak Rd, South Yarra VIC 3141
melbourne@mondoluce.com
03 9826 2232

Sydney
439 Crown St, Surry Hills NSW 2010
sydney@mondoluce.com
02 9690 2667

VI PL/MODULOR/3/3000K/BLACK/WHITE

Modulor Frame Ceiling Wall Light

by Pio and Tito Toso

The Modulor collection, designed by architects Pio and Tito Toso, offers a modular lighting solution made from blown glass that is perfect for both large and small spaces. Its unique hexagonal shape can be mounted individually or combined with other elements to create custom compositions, either on walls or suspended. The thin glass, crafted by Vetreria Vistosiï¿½s master glassblowers, gives Modulor a modern yet versatile aesthetic suitable for classic environments. With integrated LED technology, the lamps provide uniform, diffuse, and glare-free lighting.

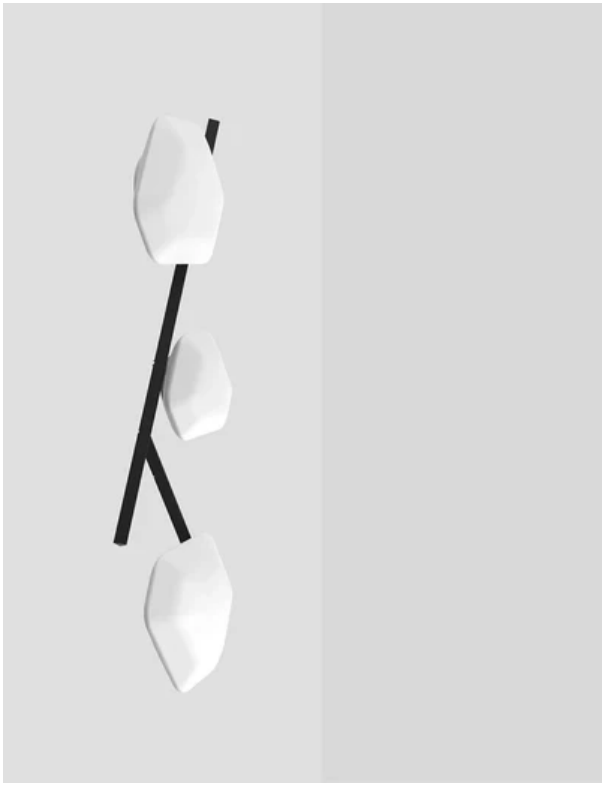

Designer	Pio and Tito Toso
Supplier	Vistosi
Country	Italy
SKU	VI PL/MODULOR/3/3000K/BLACK/WHITE
Size	3
Finish	White/Black

Product Dimensions

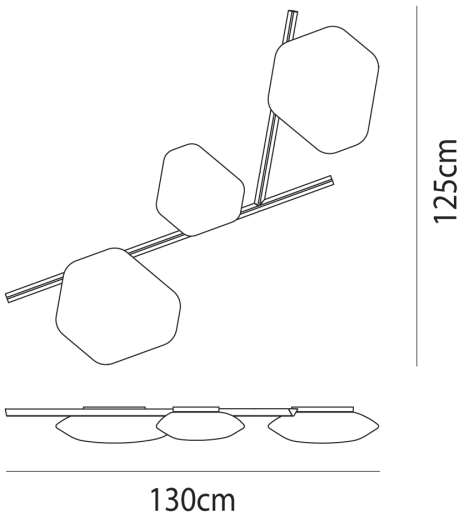

Materials	Blown Glass	**Source**	1 x 12W + 2 x 19W LED	**Colour Temp**	3000K
Output	7400lm	**IP Rating**	IP20	**Dimming**	PHASE CUT