mondoluce

Melbourne
272 Toorak Rd, South Yarra VIC 3141
melbourne@mondoluce.com
03 9826 2232

Sydney
439 Crown St, Surry Hills NSW 2010
sydney@mondoluce.com
02 9690 2667

VI PL/POD/G/3000K/WHITE

Pod Ceiling Light

by Studio Debonademeo

The Pod Ceiling Light collection features translucent and transparent finishes, enhanced by a modern LED light source. The white spot at the center of the diffuser is handcrafted, making each lamp one-of-a-kind and truly unique. Available in two sizes.



Designer	Studio Debonademeo
Supplier	Vistosi
Country	Italy
SKU	VI PL/POD/G/3000K/WHITE
Size	Large

Product Dimensions

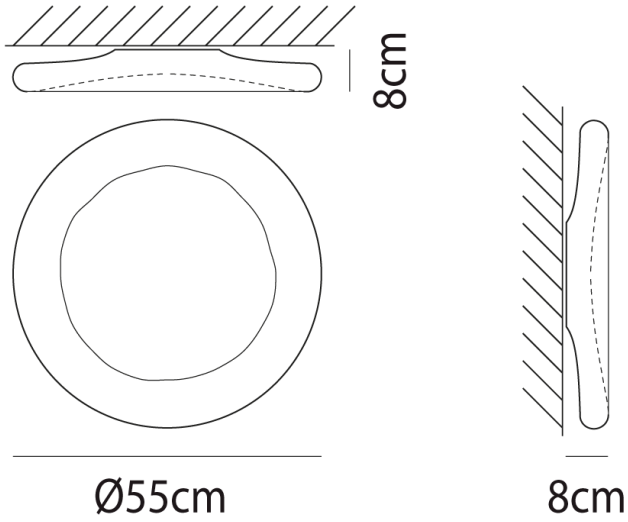

Materials	Blown Glass	**Source**	18W LED	**Colour Temp**	3000K
Output	2800lm	**IP Rating**	IP20	**Dimming**	PHASE CUT