mondoluce

Melbourne
272 Toorak Rd, South Yarra VIC 3141
melbourne@mondoluce.com
03 9826 2232

Sydney
439 Crown St, Surry Hills NSW 2010
sydney@mondoluce.com
02 9690 2667

VI PL/INFINITA/36

Infinita Ceiling Wall Light

by Renato Toso, Noti Massari E Associatti

Infinita is an elegant collection of flush mount lights with mouth blown murano glass shades and metal bases. Infinita can be installed as ceiling or wall light. The shape of the satin glass diffuser evenly distributes light within a space. Available 3 sizes with satin white finish.



Designer	Renato Toso, Noti Massari E Associatti
Supplier	Vistosi
Country	Italy
SKU	VI PL/INFINITA/36
Size	36cm
Version	E27

Product Dimensions

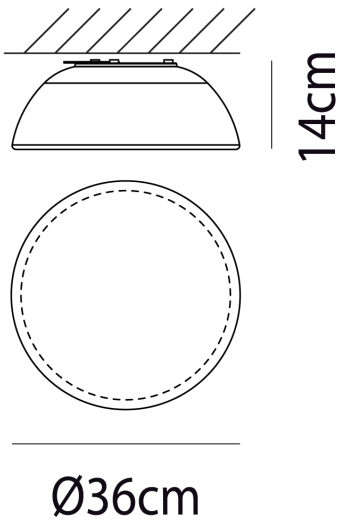

Weight	3kg	**Materials**	Blown Glass	**Source**	1 x E27 77W (Max)
IP Rating	IP20	**Dimming**	Dependent on globe		