mondoluce

Melbourne
272 Toorak Rd, South Yarra VIC 3141
melbourne@mondoluce.com
03 9826 2232

Sydney
439 Crown St, Surry Hills NSW 2010
sydney@mondoluce.com
02 9690 2667

SI MAG/PORTABLE/LED/WALL-CEILING BUNDLE

Mag Wall/Ceiling Bundle

by

Mag is a portable, rechargeable LED light. Mag attaches to it's base through a strong magnetic contact, allowing the light to be adjusted to any angle while being easy to remove when it is needed elsewhere. Mag is equipped with a built-in 1.5W LED and features a 3-step dimmer switch. Powered by a rechargeable lithium battery which provides a up to 5hrs illumination on full power, or up to 20hrs on low. An impeccable build quality with a class III IP44 rating means Mag is water resistant and can be used as a temporary outdoor light for camping or the patio. Mag Bundle includes the Mag Light with 2 x bases which can be installed on wall or ceilings. Available now for the special price of $89 only while stocks last.



Supplier	Studio Italia
Country	China
SKU	SI MAG/PORTABLE/LED/WALL-CEILING BUNDLE
Finish	Black

Product Dimensions

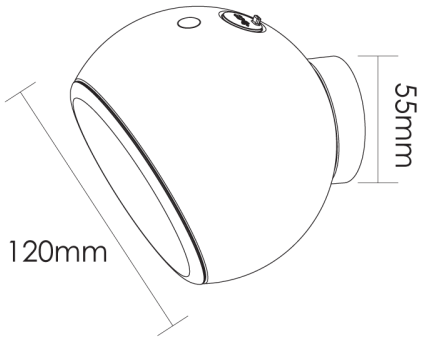

Materials	Aluminium	**Source**	1.5W LED	**Colour Temp**	2700K
Output	100lm	**CRI**	80	**IP Rating**	IP44
Notes	Includes Mag light, 2x wall base. Attaches to base via magnetic contact. Rechargeable via a standard USB type-C cable.				