Studio Italia

Trade Warehouse
12 Thomas St, Yarraville VIC 3013
info@studioitalia.com.au
03 9690 4155

MAS A/HORO/BRASS/AMBER

Horo Wall Light

by Pierre Gonalons

Horo is inspired by ancient depictions of the sun, including the sun god Ra, which gives the collection an enduring and ethereal quality. Available with clear or coloured prismatic glass and featuring brushed brass metal details. Designed by Pierre Gonalons and made in Italy.



Designer	Pierre Gonalons
Supplier	Masiero
Country	Italy
SKU	MAS A/HORO/BRASS/AMBER
Glass Finish	Amber Spectrum

Product Dimensions

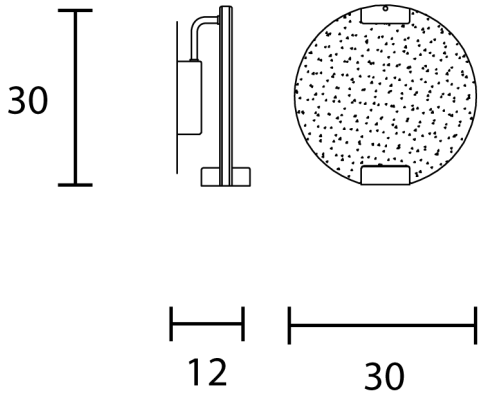

Weight	3.5kg	**Materials**	Metal frame with glass spectrum diffuser	**Source**	14.4W LED
Colour Temp	3000K	**Output**	1854lm	**CRI**	>95
Dimming	Non-dimmable				