mondoluce

Melbourne
272 Toorak Rd, South Yarra VIC 3141
melbourne@mondoluce.com
03 9826 2232

Sydney
439 Crown St, Surry Hills NSW 2010
sydney@mondoluce.com
02 9690 2667

SI SOLA/KIT/7W/RND/REC/GIMBLE/BLACK

Sola Multi Downlight - Round Recessed Gimble

by

The Sola Multi series is a customisable collection of high-quality LED downlights. The LED module, available in a 3W or 7W version, is combined with a variety of interchangeable faces for a wide range of commercial and residential applications.



Supplier	Studio Italia
Country	China
SKU	SI SOLA/KIT/7W/RND/REC/GIMBLE/BLACK
Finish	Black
Version	7W LED

Product Dimensions

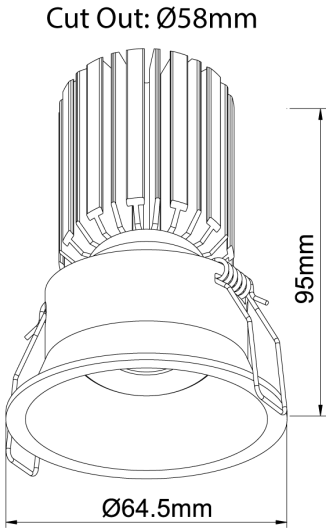

Materials	Aluminium	**Source**	7W LED	**Colour Temp**	3000K
Output	450lm	**CRI**	90	**Emission**	30 degree beam
IP Rating	IP20	**Dimming**	Non-dimmable driver supplied	**Notes**	Cutout: 58mm