mondoluce

Melbourne
272 Toorak Rd, South Yarra VIC 3141
melbourne@mondoluce.com
03 9826 2232

Sydney
439 Crown St, Surry Hills NSW 2010
sydney@mondoluce.com
02 9690 2667

SI TK/NOVA/3C/20W/REC/24D/3K/WHITE

Nova Track Spot Light

by

Nova is an adjustable track spotlight compatible with three circuit track. The minimalist yet functional design and powerful LED makes it ideal for commercial applications. Available in white finish.



Supplier	Studio Italia
Country	China
SKU	SI TK/NOVA/3C/20W/REC/24D/3K/WHITE
Finish	White

Product Dimensions

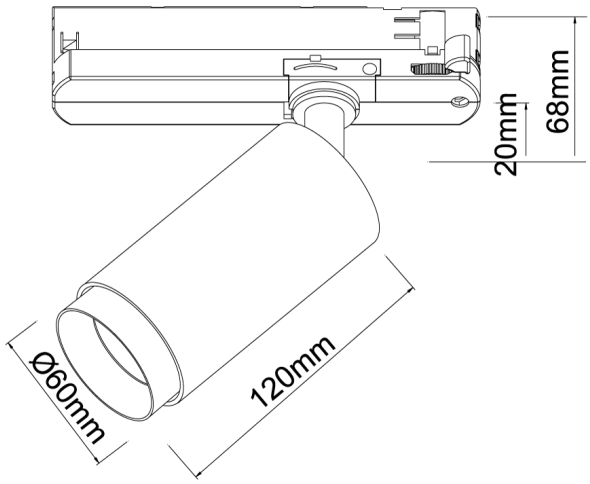

Materials	Aluminium	**Source**	20W LED	**Colour Temp**	3000K
Output	1450lm	**Emission**	24 degree beam	**IP Rating**	IP20
Dimming	Non-dimmable	**Notes**	3-circuit track. Cannot be converted to single circuit or dimmable.		