mondoluce

Melbourne
272 Toorak Rd, South Yarra VIC 3141
melbourne@mondoluce.com
03 9826 2232

Sydney
439 Crown St, Surry Hills NSW 2010
sydney@mondoluce.com
02 9690 2667

SI NELLY/8W/45D/3K/BLACK

Nelly Ceiling Light

by

Nelly is a surface mounted ceiling light with a minimalist design for contemporary applications. Equipped with an 8W LED source. PHASE dimmable. Available in white finish.



Supplier	Studio Italia
Country	China
SKU	SI NELLY/8W/45D/3K/BLACK
Finish	Black

Product Dimensions

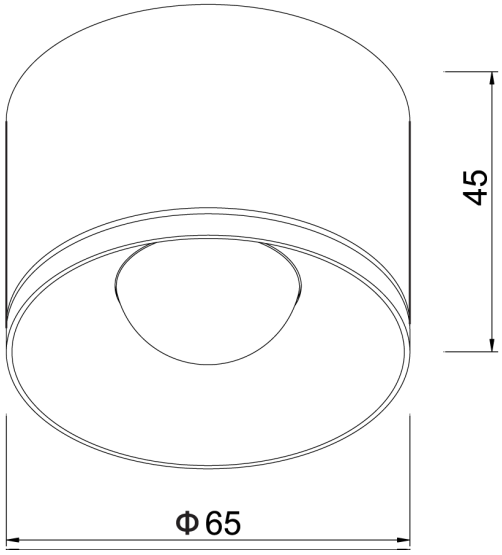

Materials	Aluminium
Output	557lm
Dimming	PHASE

Source	8W LED
Emission	45 degree beam
Notes	No driver. Load capcitor required if on PUSH dimmer.

Colour Temp	3000K
IP Rating	IP20