mondoluce

Melbourne
272 Toorak Rd, South Yarra VIC 3141
melbourne@mondoluce.com
03 9826 2232

Sydney
439 Crown St, Surry Hills NSW 2010
sydney@mondoluce.com
02 9690 2667

VI A/PUPPET/P/CHROME/CRYSTAL

Puppet Wall Light

by Romani Saccani Architetti Associati

Simple and elegant, the Puppet Wall Light is perfect for contemporary spaces. A mouth blown glass diffuser features an irregular lined degrade finish, producing a soft cloudy pattern on surrounding surfaces. Available in a variety of finish options.

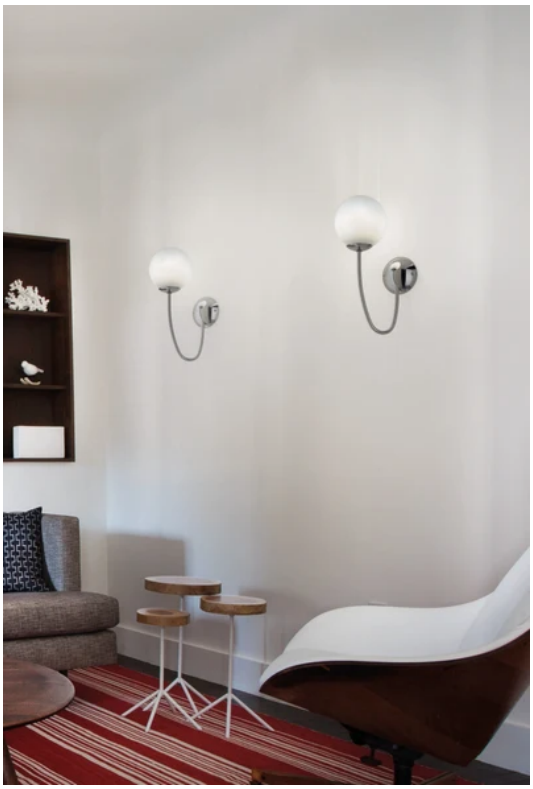

Designer	Romani Saccani Architetti Associati
Supplier	Vistosi
Country	Italy
SKU	VI A/PUPPET/P/CHROME/CRYSTAL
Glass Finish	Crystal
Frame Finish	Chrome

Product Dimensions

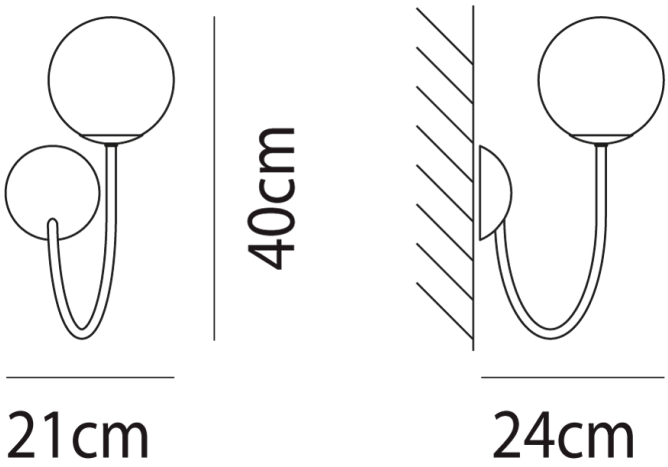

Materials	Blown Glass	**Source**	1 x G9 60W Max	**IP Rating**	IP20
Dimming	Dependent on globe				