mondoluce

Melbourne
272 Toorak Rd, South Yarra VIC 3141
melbourne@mondoluce.com
03 9826 2232

Sydney
439 Crown St, Surry Hills NSW 2010
sydney@mondoluce.com
02 9690 2667

VI PL/SPIRIT/37/CR

Spirit Ceiling Light - Crystal

by Marco Acerbis

Designed by Marco Acerbis for Vistosi, the Spirit Ceiling Light is inspired by the elegant shape of a diamond. The delicate folds which give the Spirit it's characteristic look are the result of a long process of development, creating a unique light reflection while concealing the light source. Made with mouth blown glass in Italy. Spirit is surface mounted for wall or ceiling installations. Available in 2 sizes in transparent crystal finish. Please note that this transparent crystal version of the Spirit ceiling light is discontinued with very limited stock. The white version of the Spirit remains in production and is found in our general catalogue.



Designer	Marco Acerbis
Supplier	Vistosi
Country	Italy
SKU	VI PL/SPIRIT/37/CR
Size	37cm

Product Dimensions

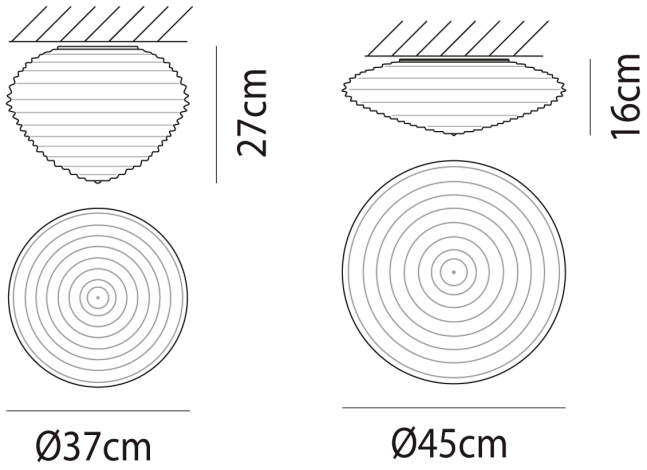

Weight	5kg	**Materials**	Blown Glass	**Source**	1 x E27 100W (Max)
IP Rating	IP20	**Dimming**	Dependent on globe		