mondoluce

Melbourne
272 Toorak Rd, South Yarra VIC 3141
melbourne@mondoluce.com
03 9826 2232

Sydney
439 Crown St, Surry Hills NSW 2010
sydney@mondoluce.com
02 9690 2667

SI A/ORO/ANT

Oro Outdoor Step Light

by

Oro is an exterior grade recessed wall light for step lighting applications. Built in 3.5W Sharp LED chip with 180lm output, 3000K colour temperature and IP55 rating. Includes non-dimmable driver (350mA). Available in sandy anthracite finish.



Supplier	Studio Italia
Country	China
SKU	SI A/ORO/ANT
Finish	Anthracite

Product Dimensions

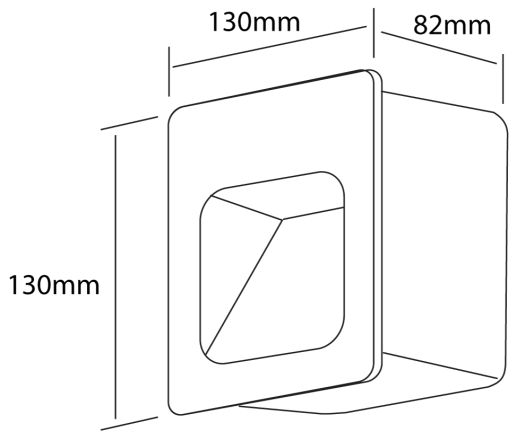

Cut-out:
115 x 115mm

Materials	Aluminium	**Source**	3.5W LED	**Colour Temp**	3000K
Output	180lm	**IP Rating**	IP55	**Dimming**	Non-Dimmable