mondoluce

Melbourne
272 Toorak Rd, South Yarra VIC 3141
melbourne@mondoluce.com
03 9826 2232

Sydney
439 Crown St, Surry Hills NSW 2010
sydney@mondoluce.com
02 9690 2667

IC PL/ESSENZA/90D/3000K/SILVER/WHITE

Essenza D Large Ceiling Light

by Marco Pagnoncelli

ESSENZA has a particularly unique, indirect light: slender structures that illuminate large metal discs. An object as minimal and pure in shape as ESSENZA can decorate a diversity of spaces, from commercial to residential to hospitality environments. The Essenza D large ceiling light is available in a variety of finish options. Made in Italy.



Designer	Marco Pagnoncelli
Supplier	Icone
Country	Italy
SKU	IC PL/ESSENZA/90D/3000K/SILVER/WHITE
Finish	Silver + White
Version	3000K

Product Dimensions

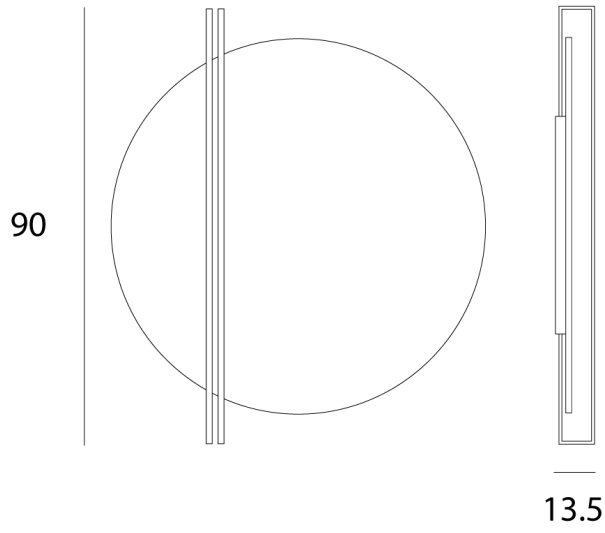

Materials	Aluminium	**Source**	35W LED	**Colour Temp**	3000K
Output	4000lm	**CRI**	>90	**Emission**	Indirect
Dimming	TRIAC	**Notes**	Overall Dimensions: 90cm x 13.5cm		