mondoluce

Melbourne
272 Toorak Rd, South Yarra VIC 3141
melbourne@mondoluce.com
03 9826 2232

Sydney
439 Crown St, Surry Hills NSW 2010
sydney@mondoluce.com
02 9690 2667

MAS S/NAPPE/C5/RD/80/MATT WHITE

Nappe Chandelier

by Marco Zito

Made in Italy, the Nappe pendant collection is inspired by the 'nappine' (tassels) typically used to close curtains and decorate Venetian salons. Each Nappe is comprised of a painted metal frame with metal or Pyrex rods and Pyrex diffusors with an inbuilt LED source. The Nappe chandelier is ideal for feature lighting applications in dining and living areas. Available in several configurations.



Designer	Marco Zito
Supplier	Masiero
Country	Italy
SKU	MAS S/NAPPE/C5/RD/80/MATT WHITE
Version	RD80
Finish	Matt White

Product Dimensions

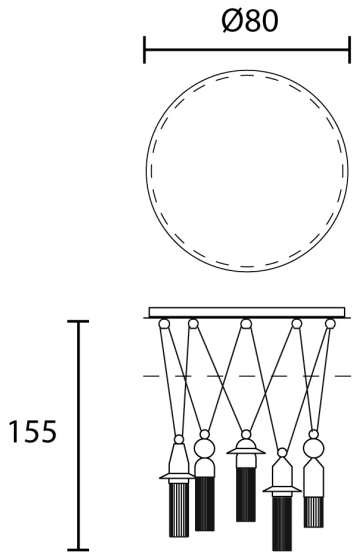

Weight	23kg	**Materials**	Metal, Pyrex	**Source**	5 x 5.4W LED
Colour Temp	3000K	**Output**	5 x 688lm	**CRI**	>90
Dimming	1-10V + PUSH				