mondoluce

Melbourne
272 Toorak Rd, South Yarra VIC 3141
melbourne@mondoluce.com
03 9826 2232

Sydney
439 Crown St, Surry Hills NSW 2010
sydney@mondoluce.com
02 9690 2667

MAS S/RIBBON/S50/MATT BLACK/TRANS

Ribbon Square Pendant

by Oriano Favaretto

Perfectly suited to feature lighting applications, the Ribbon square pendant expresses contemporary minimalism through simple lines and materials. Plate glass panels of varying sizes are arranged on a horizontal plane and encircled by a painted metal "ribbon" for a uniquely sculptural form. The frame houses a dimmable LED source that provides diffused illumination upwards and downwards. Frame available in burnished brass or matte black finish with transparent glass plates. Designed by Oriano Favaretto and made in Italy.



Designer	Oriano Favaretto
Supplier	Masiero
Country	Italy
SKU	MAS S/RIBBON/S50/MATT BLACK/TRANS
Size	S50

Product Dimensions

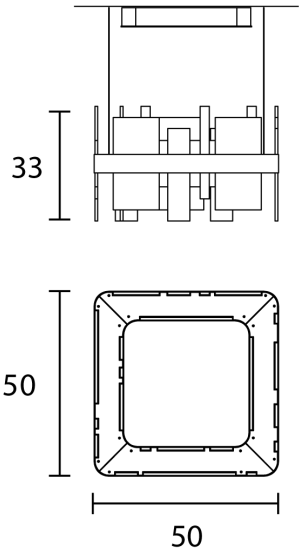

Weight	34kg	**Materials**	Painted metal frame with plate glass diffusers	**Source**	15.21W UP + 32.76W DOWN LED
Colour Temp	3000K	**Output**	2008lm UP + 4326lm DOWN	**CRI**	>90
Emission	Up + Down	**Notes**	150cm cable drop		