mondoluce

Melbourne
272 Toorak Rd, South Yarra VIC 3141
melbourne@mondoluce.com
03 9826 2232

Sydney
439 Crown St, Surry Hills NSW 2010
sydney@mondoluce.com
02 9690 2667

MAS S/HONICE/S80/MATT GOLD/ONIX

Honice Square Pendant

by Oriano Favaretto

Inspired by the beauty of onyx, the Honice wall light appeals with its high-quality, natural materials and a modern, asymmetrical design. Rectangular natural onyx diffusers of different sizes are vertically and horizontally attached to a frame with curved endings, while the frame itself is made of a band of metal with an opaque gold finish. Light shines upwards and downwards, providing direct and indirect illumination. Its warm tones and precious materials make Honice especially suited to elegant interiors, pairing well with dark wood tones and refined metals. Available in multiple size options. Designed by Oriano Favaretto.



Designer	Oriano Favaretto
Supplier	Masiero
Country	Italy
SKU	MAS S/HONICE/S80/MATT GOLD/ONIX
Size	S80

Product Dimensions

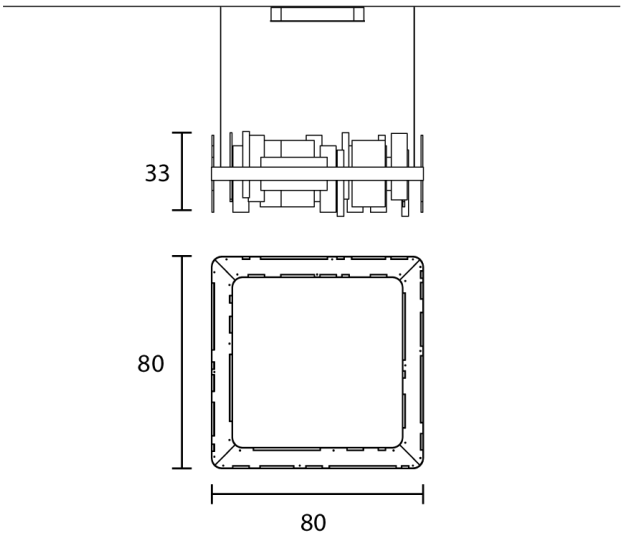

Weight	34kg	**Materials**	Metal frame with natural onyx diffuser	**Source**	15.21W UP + 32.76W DOWN LED
Colour Temp	3000K	**Output**	2008lm UP + 4326lm DOWN	**CRI**	>90
Dimming	0-10V	**Notes**	150cm cable drop		