mondoluce

Melbourne
272 Toorak Rd, South Yarra VIC 3141
melbourne@mondoluce.com
03 9826 2232

Sydney
439 Crown St, Surry Hills NSW 2010
sydney@mondoluce.com
02 9690 2667

NE S/PROJECTEUR/165/IP44/MOKA

Projecteur 165 Pendant Outdoor

by Le Corbusier

Outdoor 165 adjustable version of the Projecteur 365 featuring an aluminum body. The curved diffuser glass is sandblasted on the inner side. The clamp and canopies are painted in a matte black finish, accompanied by screws and small black chrome metal components. It offers diffused and adjustable light output and holds an IP44 rating for outdoor use. Classic design by Le Corbusier and made in Italy.



Designer	Le Corbusier
Supplier	Nemo
Country	Italy
SKU	NE S/PROJECTEUR/165/IP44/MOKA
Finish	Moka

Product Dimensions

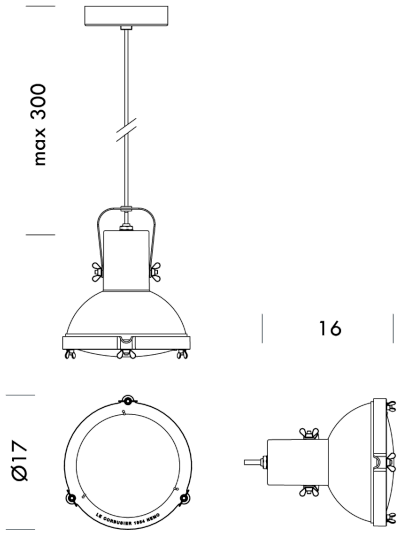

Weight	0.8kg	**Materials**	Aluminium	**Source**	1 x E27 23W
Emission	direct, spot	**IP Rating**	IP44	**Dimming**	Dependent on globe