mondoluce

**Melbourne**
272 Toorak Rd, South Yarra VIC 3141
melbourne@mondoluce.com
03 9826 2232

**Sydney**
439 Crown St, Surry Hills NSW 2010
sydney@mondoluce.com
02 9690 2667

VI PL/SPIRIT/45/WH

# Spirit Ceiling Light

by Marco Acerbis

Designed by Marco Acerbis for Vistosi, the Spirit Ceiling Light is inspired by the elegant shape of a diamond. The delicate folds which give the Spirit it's characteristic look are the result of a long process of development, creating a unique light reflection while concealing the light source. Made with mouth blown glass in Italy. Spirit is surface mounted for wall or ceiling installations. Available in 2 sizes in white finish.



| | |
|---|---|
| **Designer** | Marco Acerbis |
| **Supplier** | Vistosi |
| **Country** | Italy |
| **SKU** | VI PL/SPIRIT/45/WH |
| **Size** | 45cm |

Product Dimensions

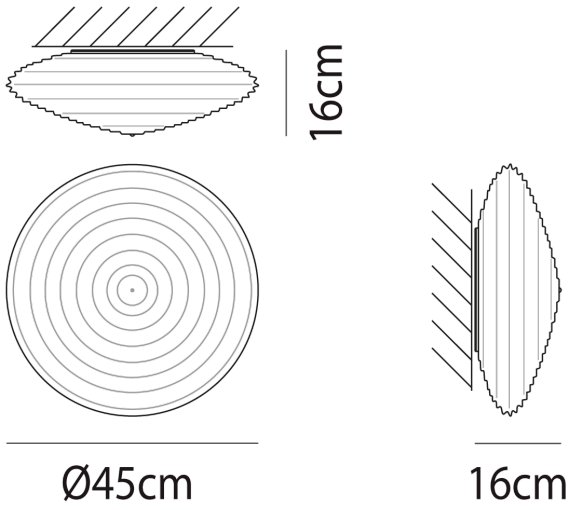


| | | | | | |
|---|---|---|---|---|---|
| **Weight** | 5kg | **Materials** | Blown Glass | **Source** | 2 x E-27 77W (Max) |
| **IP Rating** | IP20 | **Dimming** | Dependent on globe | | |