mondoluce

Melbourne
272 Toorak Rd, South Yarra VIC 3141
melbourne@mondoluce.com
03 9826 2232

Sydney
439 Crown St, Surry Hills NSW 2010
sydney@mondoluce.com
02 9690 2667

VI S/DIADEMA/C2/CHROME/CRYSTAL

Diadema C2 Chandelier

by Romani Saccani Architetti Associati

Diadema is based on the single element of the rod in pure glass. Combining reeds of different sizes, the Diadema C2 Chandelier reflects and transmits a feeling of movement, bringing opulence to a space. The metal frame allows numerous variations and plenty of room for customized versions. Design by Romani Saccani Architetti Associati for Vistosi. Made in Italy.



Designer	Romani Saccani Architetti Associati
Supplier	Vistosi
Country	Italy
SKU	VI S/DIADEMA/C2/CHROME/CRYSTAL
Frame Finish	Chrome

Product Dimensions

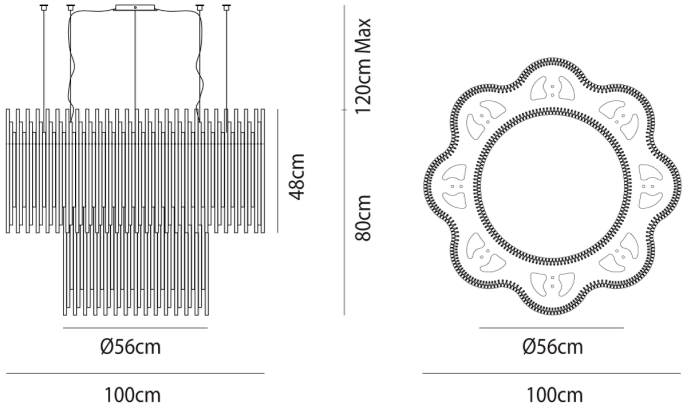

Weight	50kg	**Materials**	Blown Glass	**Source**	8 x E27 70W (Max)
Emission	Diffused	**IP Rating**	IP20	**Dimming**	Dependent on globe