mondoluce

Melbourne
272 Toorak Rd, South Yarra VIC 3141
melbourne@mondoluce.com
03 9826 2232

Sydney
439 Crown St, Surry Hills NSW 2010
sydney@mondoluce.com
02 9690 2667

VI PL/ECOS/60A/CHR/CRY

Ecos Ceiling Light

by Renato Toso, Noti Massari E Associatti

Composed of an elegant system of mouth-blown glass rings, the Ecos ceiling light casts beautiful complex patterns on nearby surfaces. Glass rings available in white or crystal finish with additional glass textures and metal options, offering a high level of customization. Available in two sizes. Design by Renato Toso, Noti Massarii & Associates for Vistosi.



Designer	Renato Toso, Noti Massari E Associatti
Supplier	Vistosi
Country	Italy
SKU	VI PL/ECOS/60A/CHR/CRY
Size	60

Product Dimensions

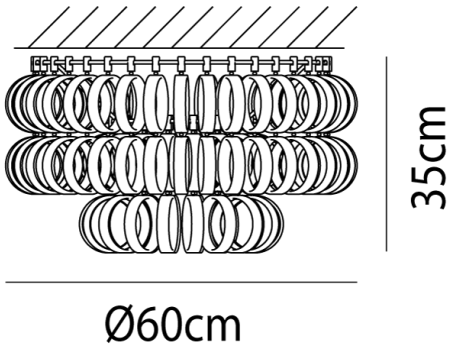

Weight	13kg	**Materials**	Blown Glass	**Source**	3 x E27 100W
IP Rating	IP20	**Dimming**	Dependent on globe		