mondoluce

Melbourne
272 Toorak Rd, South Yarra VIC 3141
melbourne@mondoluce.com
03 9826 2232

Sydney
439 Crown St, Surry Hills NSW 2010
sydney@mondoluce.com
02 9690 2667

VI A/DAMASCO/2A/TO

Damasco Wall Light

by Paolo Crepax

The Damasco Wall light collection is created with the 'bozzolo' technique, which entails manually applying 'threads' of molded glass on a re-shaped element in mouth-blown crystal.
Available in clear crystal or topaz threadsin various sizes.
Expertly hand crafted in Italy.



Designer	Paolo Crepax
Supplier	Vistosi
Country	Italy
SKU	VI A/DAMASCO/2A/TO
Finish	Topaz
Size	Small Double

Product Dimensions

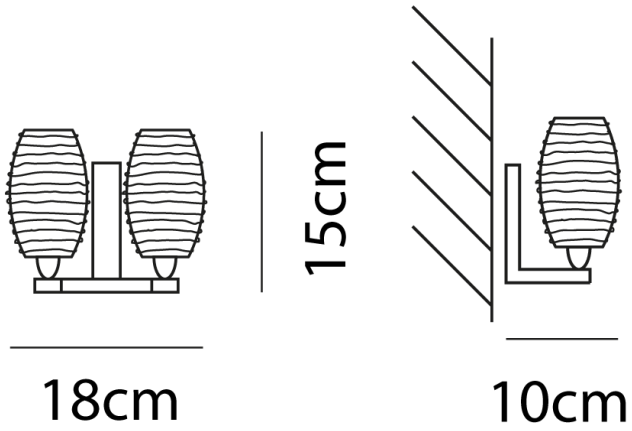

Weight	1kg	**Materials**	Blown Glass	**Source**	2 x G9 75W (Max)
IP Rating	IP20	**Dimming**	Dependent on globe		