mondoluce

Melbourne
272 Toorak Rd, South Yarra VIC 3141
melbourne@mondoluce.com
03 9826 2232

Sydney
439 Crown St, Surry Hills NSW 2010
sydney@mondoluce.com
02 9690 2667

IC A/CANALETTO/BRZ/CR

Canaletto Wall Light

by Marco Pagnoncelli

The Canaletto wall light from Icone Luce takes inspiration from the past to create a wall fitting for contemporary spaces. A smooth metal base supports the fine glass shade, recalling the elegance of art deco era light fixtures. The Canaletto is for creating lighting accents in a room or hallway, providing a soft ambient light. Available in painted pewter body with smoked glass diffuser, or brushed brass body with crystal glass diffuser. Made in Italy to the highest quality.



Designer	Marco Pagnoncelli
Supplier	Icone
Country	Italy
SKU	IC A/CANALETTO/BRZ/CR
Finish	Bronze/Crystal

Product Dimensions

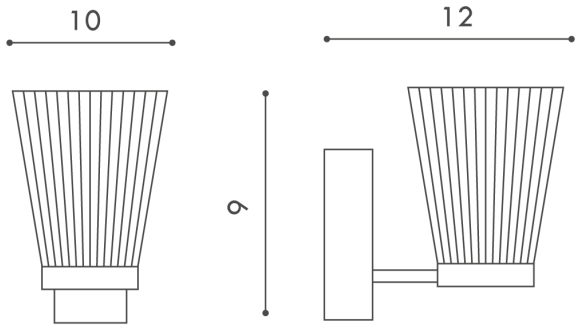

Materials	Glass	**Source**	4.5W LED	**Colour Temp**	3000K
Output	350lm	**Dimming**	No		