mondoluce

Melbourne
272 Toorak Rd, South Yarra VIC 3141
melbourne@mondoluce.com
03 9826 2232

Sydney
439 Crown St, Surry Hills NSW 2010
sydney@mondoluce.com
02 9690 2667

VI PL/LIO/30

Lio Ceiling Light

by Vistosi

A collection of mouth-blown Murano glass ceiling lamps crafted using a technique which fuses a white glass band into several layers of crystal, creating the clear band tip at the ends of the fitting. This Lio is surface mounted and suitable for ceiling or wall installation. Available in 3 sizes.



Designer	Vistosi
Supplier	Vistosi
Country	Italy
SKU	VI PL/LIO/30
Size	30cm

Product Dimensions

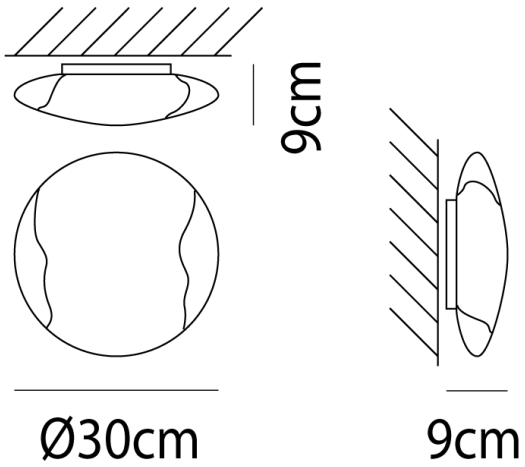

Weight	2kg
IP Rating	IP20

Materials	Blown Glass
Dimming	Dependent on globe

Source	1 x E27 100W