mondoluce

Melbourne
272 Toorak Rd, South Yarra VIC 3141
melbourne@mondoluce.com
03 9826 2232

Sydney
439 Crown St, Surry Hills NSW 2010
sydney@mondoluce.com
02 9690 2667

IC S/LADYB/80/BK

Lady B Pendant Lamp

by OIL Design Lab

Lady B is an ultra thin pendant lamp suitable for both domestic and professional installations. Equipped with high efficiency LEDs with 85W, 9000lm total output. 6mm thick diffuser in smoothed material with double satin finish for uniform lighting within a space. Unique contemporary design by O.I.L. Design Lab.



Designer	OIL Design Lab
Supplier	Icone
Country	Italy
SKU	IC S/LADYB/80/BK
Finish	Black

Product Dimensions

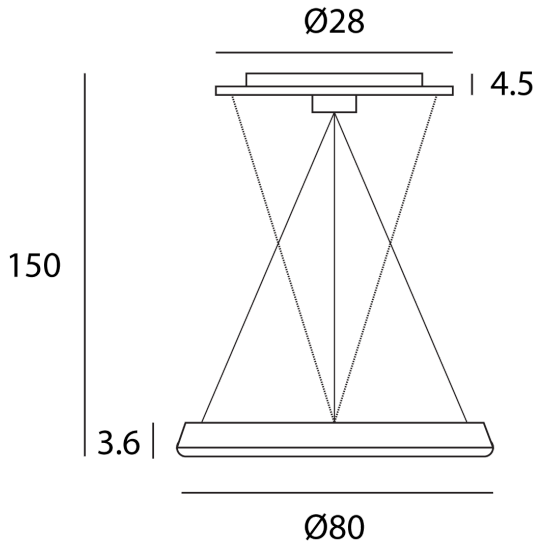

Source	85W LED	**Colour Temp**	3000K	**Output**	9000lm
CRI	90	**Dimming**	DALI		