mondoluce

Melbourne
272 Toorak Rd, South Yarra VIC 3141
melbourne@mondoluce.com
03 9826 2232

Sydney
439 Crown St, Surry Hills NSW 2010
sydney@mondoluce.com
02 9690 2667

SE A/DOBI/BRASS/BLACK

Dobi Wall Light

by Chao-Cheng Chen

Dobi wall light by SEED Design is an extension of the Dodo collection, a design inspired by the comical bird from Alice in wonderland. Like the Dodo, the Dobi is equipped with dip switch, adjustable shade, and elongated dome shape which softens a space. Available in a variety of finishes. Design by Chao-Cheng Chan.



Designer	Chao-Cheng Chen
Supplier	Seed Design
Country	Taiwan
SKU	SE A/DOBI/BRASS/BLACK
Finish	Brass & Black

Product Dimensions

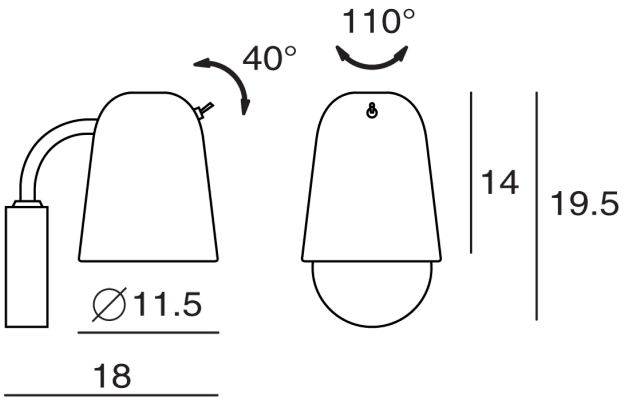

Materials	Steel
Notes	Adjustable head

Source	1 x E14 30W (Max)

Dimming	Dependent on globe