mondoluce

Melbourne
272 Toorak Rd, South Yarra VIC 3141
melbourne@mondoluce.com
03 9826 2232

Sydney
439 Crown St, Surry Hills NSW 2010
sydney@mondoluce.com
02 9690 2667

VI PL/SOGNO/55/WH

Sogno Wall Ceiling

by Vistosi

The Sogno Light by Vistosi can be used as either a ceiling or a wall light. The beautiful opaque blown glass diffuser creates a soft ambient light and the minimal design means the Sogno can be used for various applications in both residential and commercial spaces.



Designer	Vistosi
Supplier	Vistosi
Country	Italy
SKU	VI PL/SOGNO/55/WH
Size	55cm

Product Dimensions

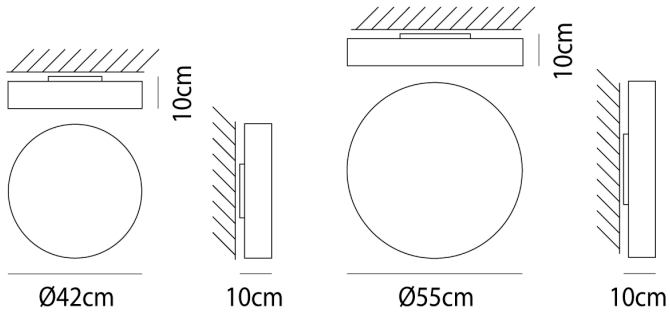

Weight	7kg
IP Rating	IP20

Materials	Blown Glass
Dimming	Dependent on globe

Source	2 x E27