mondoluce

**Melbourne**
272 Toorak Rd, South Yarra VIC 3141
melbourne@mondoluce.com
03 9826 2232

**Sydney**
439 Crown St, Surry Hills NSW 2010
sydney@mondoluce.com
02 9690 2667

VI PL/IMPLODE/50

# Implode Ceiling Light

by Gregorio Spini

A collection which represents the illusion of a surface created by the implosion of a volume. Implode is made up of a gradation of multiple layers of white and transparent hand blown Italian Murano glass. Ceiling light available in two sizes. Design by Gregorio Spini for Vistosi.



| | |
|---|---|
| **Designer** | Gregorio Spini |
| **Supplier** | Vistosi |
| **Country** | Italy |
| **SKU** | VI PL/IMPLODE/50 |
| **Size** | 50cm |

Product Dimensions

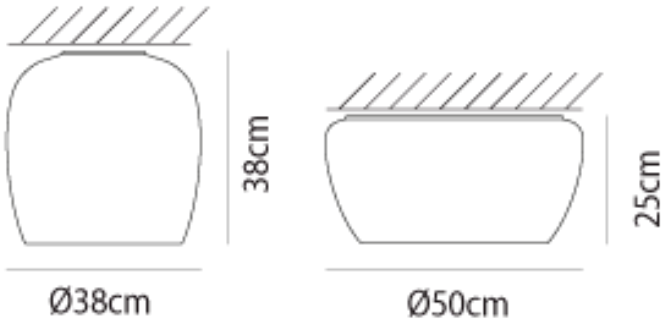


| | |
|---|---|
| **Weight** | 12kg |
| **IP Rating** | IP20 |

| | |
|---|---|
| **Materials** | Blown Glass |
| **Dimming** | Dependent on globe |

| | |
|---|---|
| **Source** | 3 x E27 100W (Max) |