mondoluce

Melbourne
272 Toorak Rd, South Yarra VIC 3141
melbourne@mondoluce.com
03 9826 2232

Sydney
439 Crown St, Surry Hills NSW 2010
sydney@mondoluce.com
02 9690 2667

SE S/PACIFIC/MINI/CO/BK

Mini Pacific Pendant

by

A mini version of the pacific pendant. The wishbone-like structure supplements it's classic style while providing adjustability and balance. Available in copper finish with black flex.



Supplier	Seed Design
Country	Taiwan
SKU	SE S/PACIFIC/MINI/CO/BK
Finish	Copper with black flex

Product Dimensions

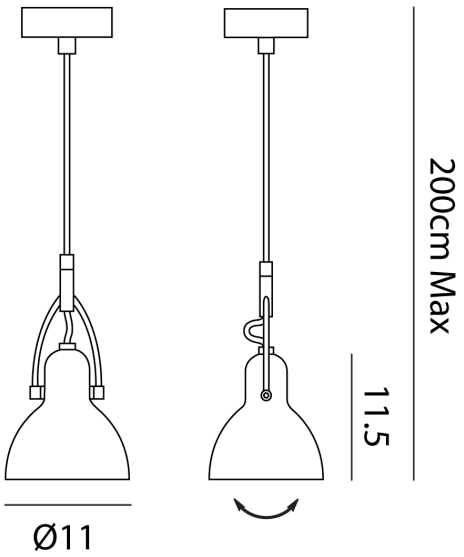

Materials	Steel	**Source**	1 x E27 46W (Max)	**Dimming**	Dependent on globe