mondoluce

Melbourne
272 Toorak Rd, South Yarra VIC 3141
melbourne@mondoluce.com
03 9826 2232

Sydney
439 Crown St, Surry Hills NSW 2010
sydney@mondoluce.com
02 9690 2667

ARCO A/MICHIGAN/24W/BLACK

Michigan Wall Washer

by Studio Italia

The Michigan Wall Washer is equipped with a high output 24W LED to bathe a wall in light. Simple design for application in contemporary settings. Available in black or white finish. French designed. Dimmable.



Supplier	Studio Italia
Country	China
SKU	ARCO A/MICHIGAN/24W/BLACK
Finish	Black

Product Dimensions

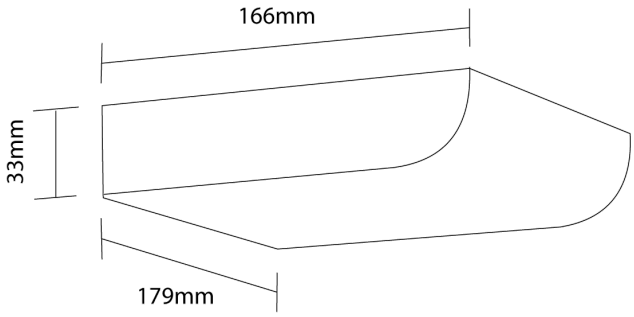

Materials	Aluminium
Output	1600lm
Dimming	TRIAC

Source	24W AC LED
CRI	80

Colour Temp	3000K
IP Rating	IP20