mondoluce

Melbourne
272 Toorak Rd, South Yarra VIC 3141
melbourne@mondoluce.com
03 9826 2232

Sydney
439 Crown St, Surry Hills NSW 2010
sydney@mondoluce.com
02 9690 2667

NE S/PROJECTEUR/165/WS

Projecteur 165 Pendant

by Le Corbusier

Projecteur 165 is a mini adjustable version of the Projecteur 365, with aluminium body. Diffuser glass curved and sandblasted in the inner part. Canopy painted in matt black, screws and small metal parts black chromed. Diffused and adjustable light output. Classic design by Le Corbusier and made in Italy.



Designer	Le Corbusier
Supplier	Nemo
Country	Italy
SKU	NE S/PROJECTEUR/165/WS
Finish	White Sand

Product Dimensions

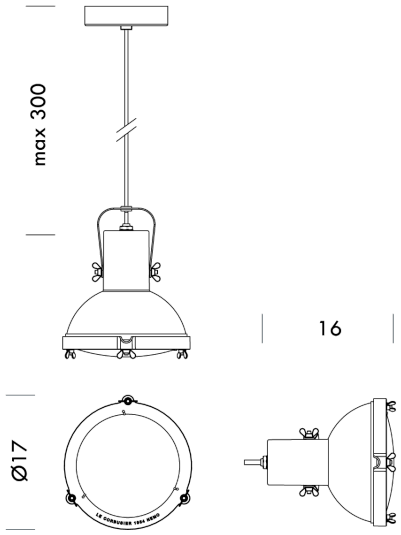

Weight	0.8kg	**Materials**	Aluminium	**Source**	1 x E27 23W
Emission	direct, spot	**IP Rating**	IP20	**Dimming**	Dependent on globe