mondoluce

Melbourne
272 Toorak Rd, South Yarra VIC 3141
melbourne@mondoluce.com
03 9826 2232

Sydney
439 Crown St, Surry Hills NSW 2010
sydney@mondoluce.com
02 9690 2667

NE S/SPIGOLO/VERTICAL/3000K/BLACK

Spigolo Vertical Pendant

by Studiocharlie

The SPIGOLO design is based on an extruded and tubular aluminium structure, connected with moulded ABS joints. Thanks to the joints, enabling the profiles to house LED sources, one can rotate 360 degrees in order to produce a directional direct or indirect lighting, screened by an opaline diffuser in polycarbonate. The vertical pendant version creates ambience in a versatile and a comfortable way.

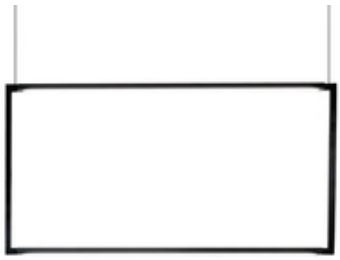

Designer	Studiocharlie
Supplier	Nemo
Country	Italy
SKU	NE S/SPIGOLO/VERTICAL/3000K/BLACK
Finish	Black
Version	3000K

Product Dimensions

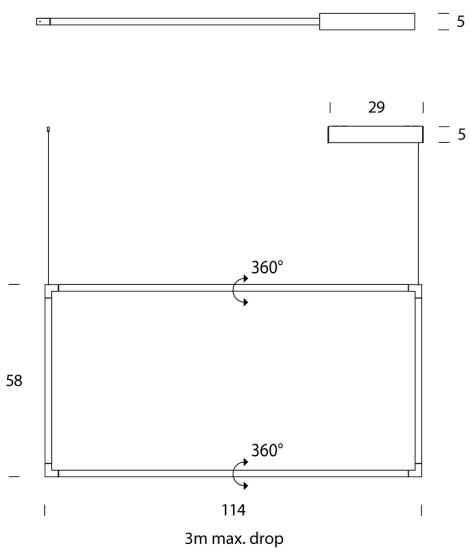

Weight	2.8kg	**Materials**	Aluminium	**Source**	2 x 19W LED
Colour Temp	3000K	**Output**	2 x 1125lm	**CRI**	85
Emission	double, diffused, orientable 360 degrees	**IP Rating**	IP20	**Dimming**	1-10v