mondoluce

Melbourne
272 Toorak Rd, South Yarra VIC 3141
melbourne@mondoluce.com
03 9826 2232

Sydney
439 Crown St, Surry Hills NSW 2010
sydney@mondoluce.com
02 9690 2667

NE S/ELLISSE/DBL/3000K/WH

Ellisse Pendant Double

by Federico Palazzari

The Ellisse Pendant Double from NEMO is an LED pendant lamp for widespread direct and indirect lighting. Two pendants with opaline diffusers and aluminium bodies hang from a central base to create an overlay effect. Ellisse is manufactured through a proprietary technology to combine the extruded bars.



Designer	Federico Palazzari
Supplier	Nemo
Country	Italy
SKU	NE S/ELLISSE/DBL/3000K/WH
Finish	White
Version	3000K

Product Dimensions

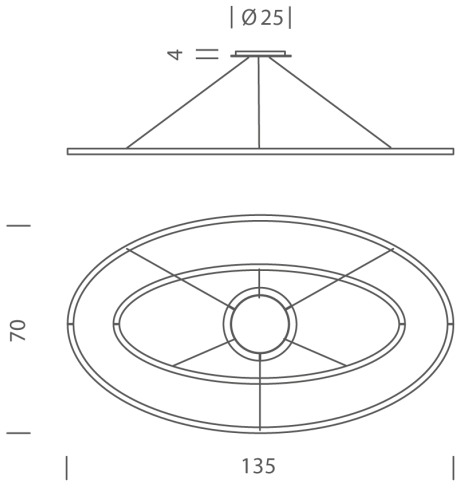

Materials	Aluminium	**Source**	90W LED	**Colour Temp**	3000K
Output	2825+1850lm	**CRI**	85	**Emission**	diffused orientable uplight(minor), diffused orientable downlight (major)
IP Rating	IP20	**Dimming**	1-10v		