mondoluce

Melbourne
272 Toorak Rd, South Yarra VIC 3141
melbourne@mondoluce.com
03 9826 2232

Sydney
439 Crown St, Surry Hills NSW 2010
sydney@mondoluce.com
02 9690 2667

NE S/ELLISSE/TRIPLE/3000K/BLACK

Ellisse Pendant Triple

by Federico Palazzari

Ellisse Triple from NEMO is an LED pendant lamp for widespread direct and indirect lighting. Three pendants with opaline diffusers and aluminium bodies hang from a central base creating a convergence of linear plains for feature lighting applications. Available in black finish.

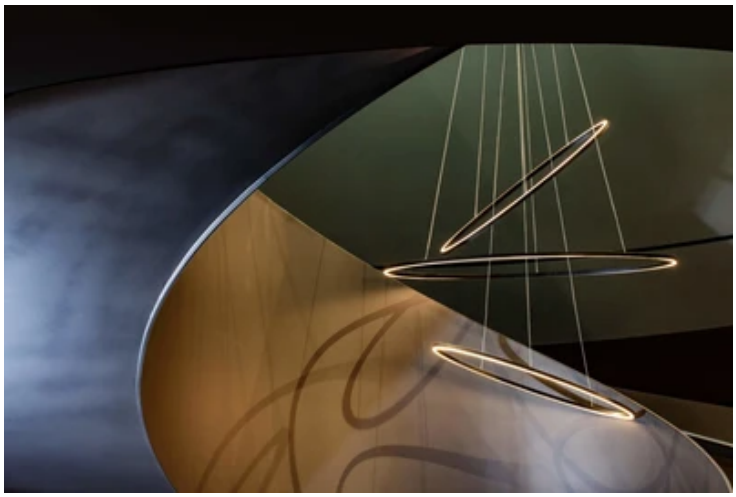

Designer	Federico Palazzari
Supplier	Nemo
Country	Italy
SKU	NE S/ELLISSE/TRIPLE/3000K/BLACK
Finish	Black
Version	3000K

Product Dimensions

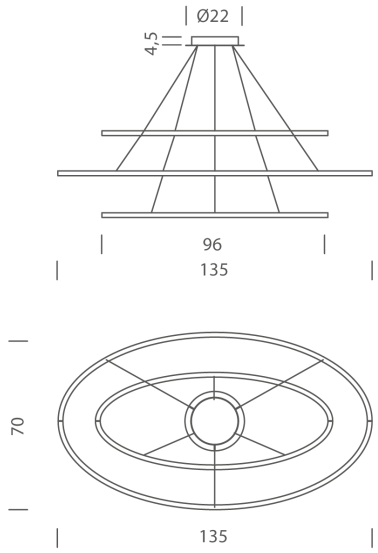

Weight	5kg	**Materials**	Aluminium	**Source**	90W LED
Colour Temp	3000K	**Output**	1325+2050+1325lm	**CRI**	85
Emission	diffused orientable uplight(minor), diffused orientable downlight (major/minor)	**IP Rating**	IP20	**Dimming**	1-10v