Studio Italia

Trade Warehouse
12 Thomas St, Yarraville VIC 3013
info@studioitalia.com.au
03 9690 4155

VI A/JUBE/S/GOLD/AMETHYST

Jube Wall Light

by Favaretto&Partners

A wall light version of the award winning Jube pendant from Vistosi. Jube was born from the union of two mouth blown glasses that, once assembled together, create an overlapping, ton sur ton effect with retro charm. An 8.5W LED source produces a widespread light in a form ideal for adding delicate accents within a space. Available in various finish combinations.



Designer	Favaretto&Partners
Supplier	Vistosi
Country	Italy
SKU	VI A/JUBE/S/GOLD/AMETHYST
Glass Finish	Amethyst
Metal Finish	Gold

Product Dimensions

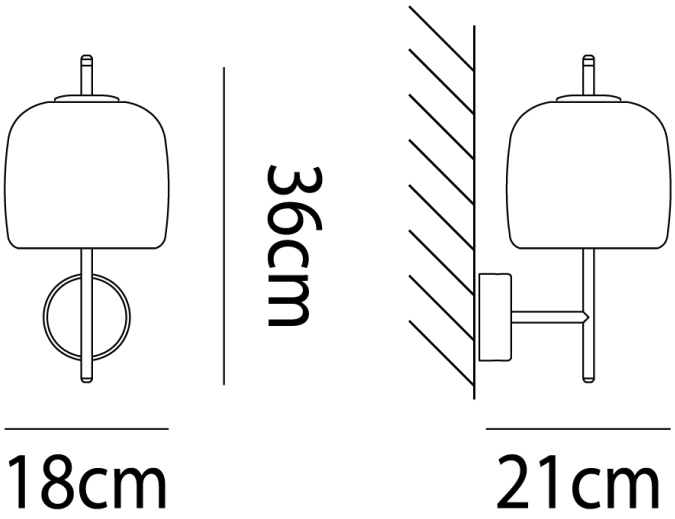

Weight	2kg	**Materials**	Blown Glass	**Source**	8.5W LED
Colour Temp	3000K	**Output**	1200lm	**IP Rating**	IP20
Dimming	PHASE				