mondoluce

Melbourne
272 Toorak Rd, South Yarra VIC 3141
melbourne@mondoluce.com
03 9826 2232

Sydney
439 Crown St, Surry Hills NSW 2010
sydney@mondoluce.com
02 9690 2667

VI LT/JUBE/P/GOLD/SMOKE

Jube Table Lamp

by Favaretto&Partners

Essential, sinuous and delicate, Jube was born from the union of two mouth blown glasses that, once assembled together, create an overlapping, ton sur ton effect with retro charm. Thanks to a powerful waterjet which perforates glass with holes of a very large diameter, the fusion of the glasses is perfectly integrated, allowing two glasses look like a single piece. The LED light source produces a widespread and powerful light. Table lamp available in large, small or mini size with various shade and base finish combinations.



Designer	Favaretto&Partners
Supplier	Vistosi
Country	Italy
SKU	VI LT/JUBE/P/GOLD/SMOKE
Glass Finish	Smoke
Metal Finish	Gold
Size	P

Product Dimensions

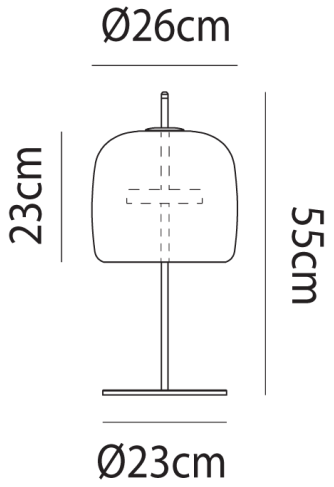

Weight	3kg
Colour Temp	3000K
IP Rating	IP20

Materials	Blown Glass
Output	2000lm
Dimming	Dimmer on cable

Source	1 x 13W LED
CRI	>80